Founded in 2010, ENGEETECH is a dynamic company headquartered in Indore, India, specializing in prototyping and production. The company boasts a state-of-the-art facility that serves as a hub for innovation and manufacturing excellence. This expansive space enables ENGEETECH to consistently deliver high-quality products and solutions to meet the evolving needs of its clients.

ENGEETECH

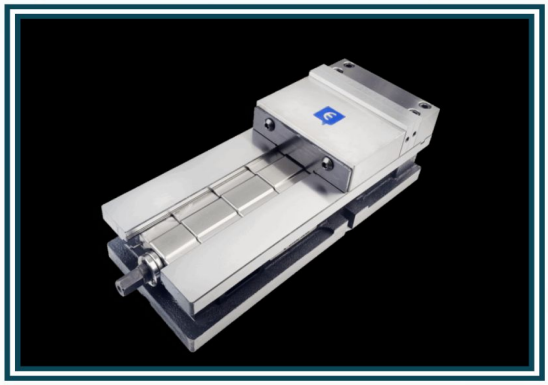

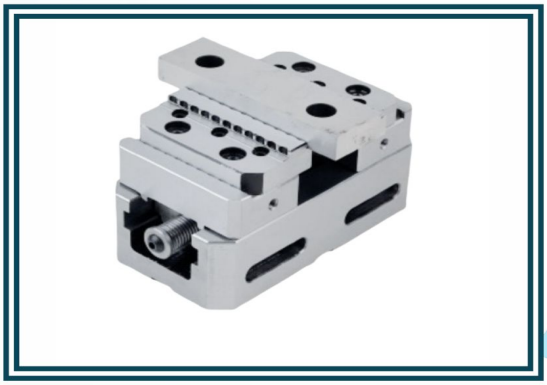

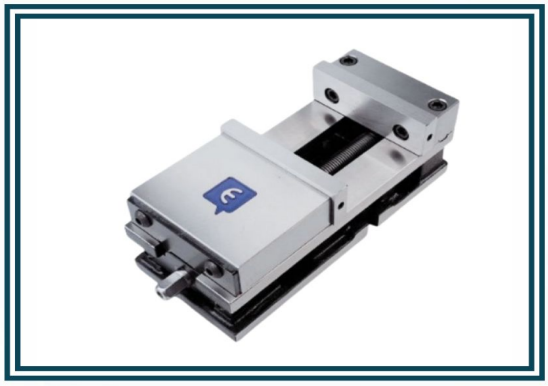

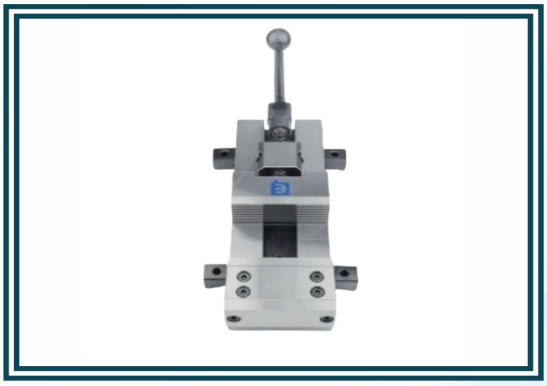

About Us

Founded in 2010, ENGEETECH is a dynamic company headquartered in Indore, India, specializing in prototyping and production. The company boasts a state-of-the-art facility that serves as a hub for innovation and manufacturing excellence. This expansive space enables ENGEETECH to consistently deliver high-quality products and solutions to meet the evolving needs of its clients. With a focus on cutting-edge technology and a commitment to precision, ENGEETECH ENGINEERINGS has established itself as a key industry player, advancing holding devices for machining and production processes.

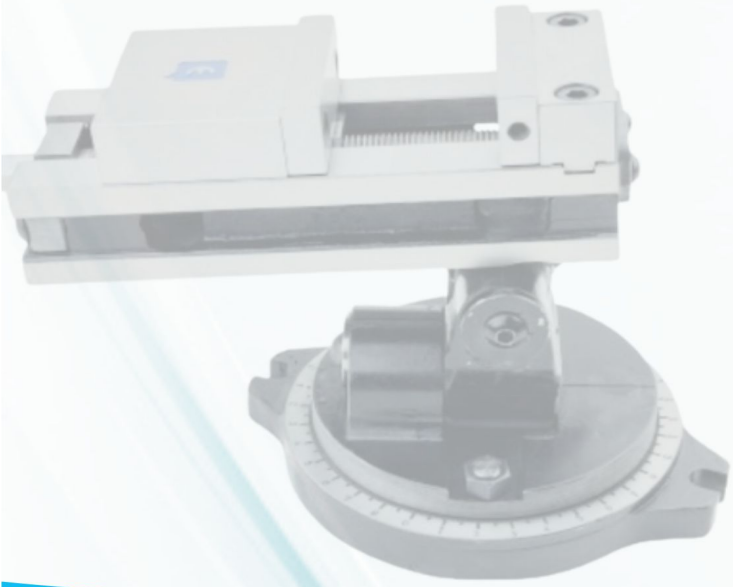

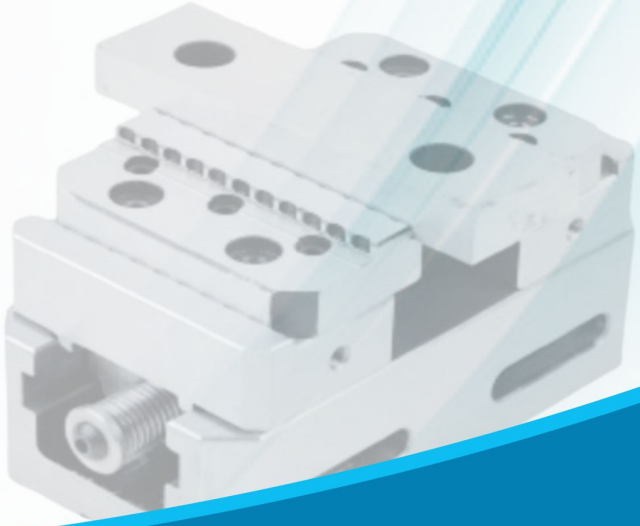

Our Products

ENGEETECH

10 Inch Standard CS Machine Vise

width	:	200 mm
opening	:	250 mm
material	:	Ductile Iron Material SG 500/7
ACCURACY	:	0.02/0.03 mm

12 Inch Precision Modular Machine Vise

width	:	150 mm
opening	:	305 mm
material	:	Steel Body
ACCURACY	:	0.02 MICRON

2 Inch Milling Vise

width	:	80 mm
opening	:	50 mm
material	:	Ductile Iron Material SG 500/7
ACCURACY	:	0.02 MICRON

Our Products

4 Inch Self Centering 20-200 Opening

width	:	100 mm
opening	:	20-200 mm
material	:	Steel Body
ACCURACY	:	0.02/ 0.0.3 mm

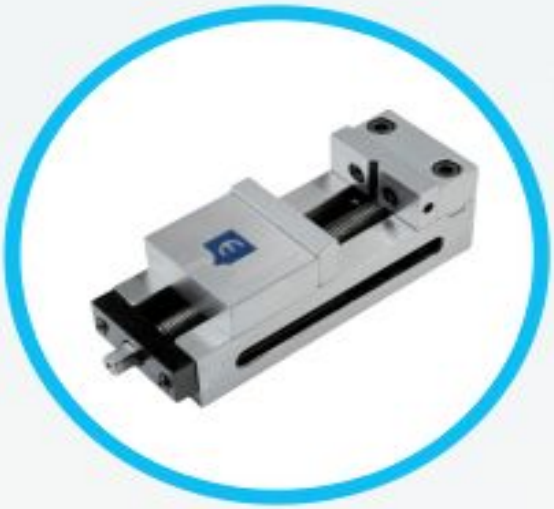

4 Inch Surface Grinding Vise

width	:	80 mm
opening	:	100 mm
material	:	Ductile iron SG 500/7
ACURACY	:	0.02/0.03 mm

4 Inch Universal Vise

width	:	100 mm
opening	:	100 mm
material	:	Ductile iron SG 500/7

Our Products

4 Standard A Machine Vise

width	:	100mm
opening	:	100 mm
material	:	Ductile Iron Material SG 500/7
ACCURACY	:	0.02/ 0.0.3 mm

1 Day - Goa Full Day Private Tour

width	:	100mm
opening	:	100 mm
material	:	Ductile Iron Material SG 500/7
ACCURACY	:	0.02/ 0.0.3 mm

6 Inch Precision Modular Vise

width	:	125 mm
opening	:	150 mm
material	:	Steel Body
ACCURACY	:	0.02/0.01 mm

Our Products

8 Inch Standard CS THV

WIDTH	:	200mm
OPENING	:	200mm
ACCURACY	:	0.02 MICRON
MATERIAL	:	DUCTILE IRON SG 500/7

6 Inch Standard CN-200 THV

width	:	150mm
opening	:	150mm
material	:	Ductile iron SG 500/7
ACCURACY	:	0.02/0.03 mm

6 Inch Standard CN-200 THV

width	:	150mm
opening	:	150mm
material	:	Ductile iron SG 500/7
ACCURACY	:	0.02/0.03 mm

Our Products

6 Inch Standard CS 150 THV

width	:	150 mm
opening	:	150 mm
material	:	Ductile Iron Material SG 500/7
ACCURACY	:	0.02/0.03mm

6 Standard A Machine Vise

width	:	150 mm
opening	:	150 mm
material	:	Ductile Iron Material SG 500/7
ACCURACY	:	0.02/ 0.0.3 mm

8 Inch Precision Modular Vise

WIDTH	:	150 mm
OPENING	:	205mm
ACCURACY	:	0.02/ 0.0.3 mm
MATERIAL	:	STEEL BODY

Contact Us

ENGEETECH

31-B , Sector-A , Industrial Area , Sanwer Road ,

Indore -452015 (M.P) India.

Call Us : +91-731-3688791,

+91-98260-24869, +91-98930-26489

Email : engeetechengineerings@gmail.com,

salesengeetechengineerings@gmail.com