VORTEX FLOWMETER

# AUTOMAC

AUTOMAC
ENGINEERS
Excellency in Technology Solution

Industrial instruments manufacturer Specializing in instrument for Chemical, Petro chemicals, Pharmaceuticals, Paper, Steel, , Power, Water & Waste water industry since 1998

PLOT NO. 627/2, GIDC, PALEJ, N..H. 48, DIST. BHARUCH, GUJARAT, INDIA - 392220
CONTACT - 8511188601, EMAIL - info@automac.in, wab site - www.automac.in

# VORTEX FLOW METER

**DN15-DN300 mm**

AUTOMAC ENGINEERS
Excellency in Technology Solution

## Description

Vortex flow meter is one kind of velocity type flow meter, it's based on Karman vortex theory and adopts piezoelectric crystal to detect the burble frequency of the fluid caused by flowing through the triangular prism in the pipeline and then measure the flow of fluid. It is widely used in petrol, chemical industry, light industry and power heat supply and so on.

## Working Principle

When the fluid in the pipeline passes the burble generator(triangular prism),burble will generate due to the acceleration of partial flow rate. The burble will arise alternatively in two burble lines, which is called Karman vortex.
The releasing frequency of Karman vortex depends on the size of triangle prim and flow rate of fluid, while independent of the medium feature parameter, such as the temperature, pressure, it can be indicated by the following formulas:

F=SR*v (1-1.27*d/D)  Q=3600*F/K  M=Q*P

- F..... The releasing frequency of Karman vortex (Hz)
- Sr...Strouhal number (unit: dimensionless)
- V..... Medium flow rate (m/s)
- d..... The width of triangle prim
- D..... Vortex meter inner diameter (m)
- Q..... Instantaneous volume flow rate ($m^3/h$)
- K.....Vortex meter coefficient (unit pulse number/$m^3$)
- M.... Instantaneous quality flow rate (kg/h)
- P..... Fluid density ($kg/m^3$)

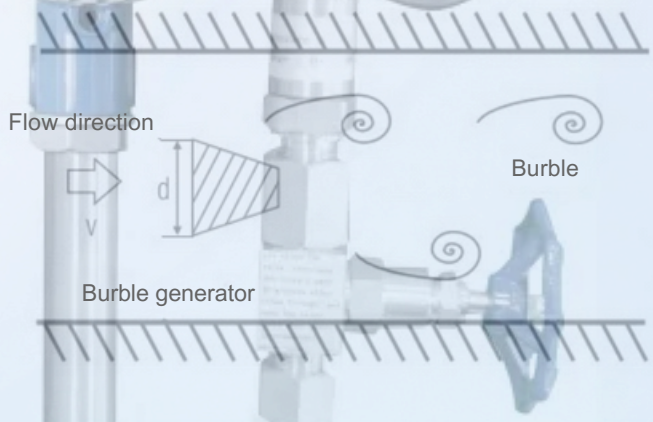


## Benefit

- Integrated pressure and temperature compensation.
- 4-20mA, pulse with HART; Optional pulse with RS485
- Wide temperature range up to highest temperature 350°C
- Adopt Japan OVAL technology and design
- Embedded sensor, 4 piezo-electric crystal encapsulated inside the sensor.
- No moving parts, no abrasion, non-wearing parts inside, fully welded SS304 body (Optional SS316)

## Standard Specification

- Size : DN15-DN300mm
- Accuracy : ±1.5% (standard), ±1.0% (optional)
- Power Supply : 12VDC, 24VDC
- Communication :RS485/Modbus, Hart, Profitbus
- Flange Standard : EN1092-1
  PN10,PN16,PN25,PN40
  ANSI BS16.5 Class 150,300,600
  JIS2220 10K, 20K,40
  AS2129 Table D,Table E
  AS4087 PN16,PN21,PN35
- Straight Pipe : Inlet Path ≥ 12D,Outlet Path ≥ 5D
- Signal Output : 4-20 mA,pulse
- Frequency Output : 2-3000 Hz
- Relative Humidity : ≤85%
- Explosion-proof : Exia IIC T6 Gb
- Ambient Temperature: -40°C-55°C (Non Ex-proof Place)
  -20°C-55°C (Non Ex-proof Place)
- Nominal Pressure : 1.6 MPa, 2.5 MPa, 4.0 MPa
- Protection Grade : IP65
- Velocity : 0.4-7.0 m/s liquid
  4.0-60 m/s gas
  5.0~70 m/s steam
- Body Material : SS304(Standard), SS316(Optional)
- Resistance Coefficient: Cd <2.6
- Oscillatory Acceleration: 0.2g
- Reynolds Number : 2x104-7x106

# VORTEX FLOW METER

**DN15-DN300 mm**

AUTOMAC ENGINEERS
Excellency in Technology Solution

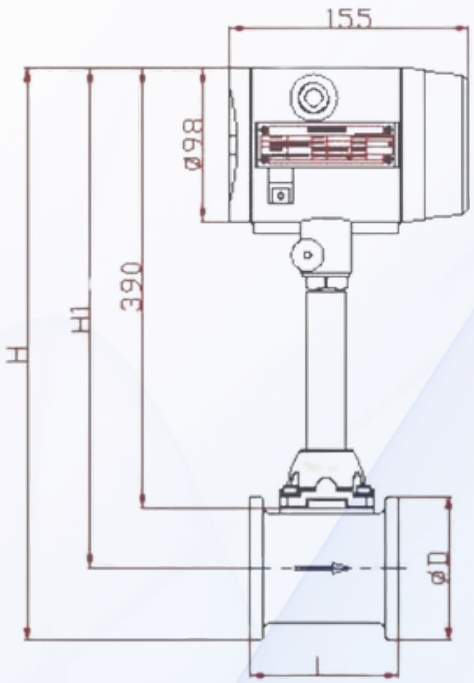

| Pipe size | H1 | H | L | D | C |
|---|---|---|---|---|---|
| 15 | 431 | 448 | 70 | 35.1 | 15 |
| 220 | 431 | 452 | 70 | 43 | 20 |
| 25 | 431 | 456 | 70 | 50.8 | 25 |
| 32 | 431 | 463 | | 64 | 32 |
| 40 | 428 | 464 | 70 | 73 | 40 |
| 50 | 431 | 477 | 75 | 92 | 50 |
| 65 | 440 | 492 | 75 | 105 | 65 |
| 80 | 448 | 511 | 100 | 127 | 80 |
| 100 | 459 | 537 | 120 | 157.2 | 100 |
| 125 | 471 | 564 | 103 | 186 | 125 |
| 150 | 484 | 592 | 120 | 216 | 150 |
| 200 | 504 | 624 | 98 | 240 | 200 |
| 250 | 535 | 684 | 114 | 298 | 250 |
| 300 | 560 | 734 | 130 | 348 | 300 |

# VORTEX FLOW METER

**DN15-DN300 mm**

AUTOMAC ENGINEERS
Excellency in Technology Solution

## With Pressure & Temperature Compensation

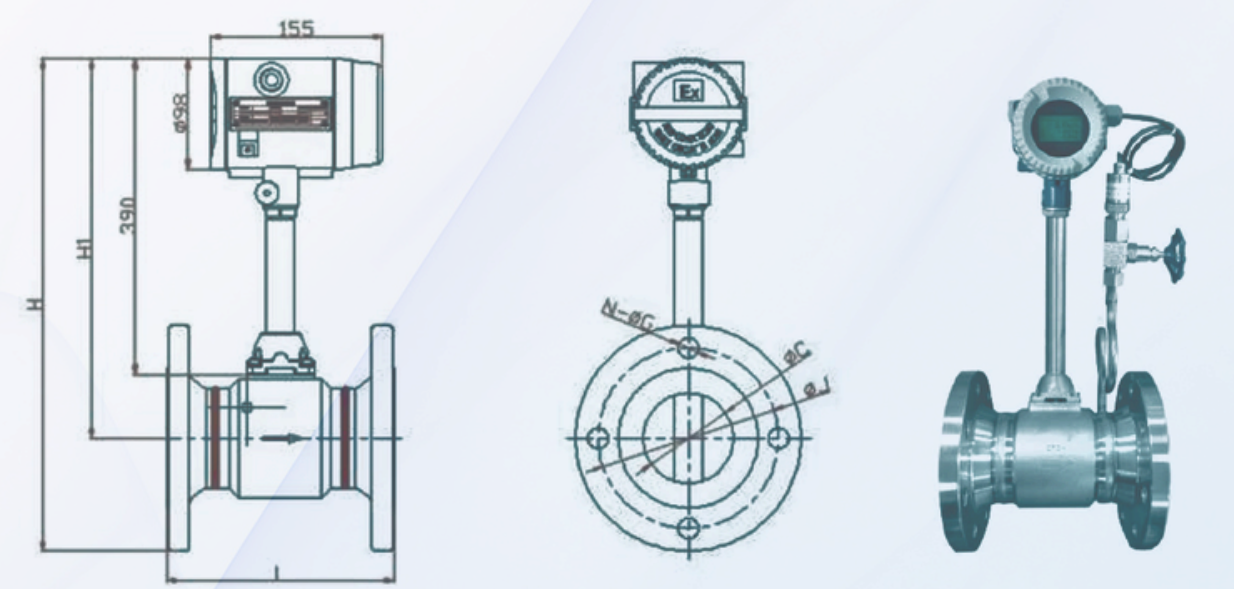


| Pipe size | L | H1 | China GB 1.6MPa | | | ANSI 150RF | | | ANSI 300RF | | | C |
|---|---|---|---|---|---|---|---|---|---|---|---|---|
| | | | H | J | N-ϕG | H | J | N-ϕG | H | J | N-ϕG | |
| 15 | 170 | 431 | 478 | 65 | 4-ϕ14 | / | | | / | | | 15 |
| 20 | 170 | 431 | 483 | 75 | 4-ϕ14 | 480 | 70 | 4-ϕ15 | 489 | 82.5 | 4-ϕ19 | 20 |
| 25 | 170 | 431 | 488 | 85 | 4-ϕ14 | 485 | 79.5 | 4-ϕ15 | 493 | 89 | 4-ϕ19 | 25 |
| 32 | 170 | 431 | 501 | 100 | 4-ϕ18 | 490 | 89 | 4-ϕ15 | 497 | 98.4 | 4-ϕ19 | 32 |
| 40 | 170 | 428 | 503 | 110 | 4-ϕ18 | 491 | 98.5 | 4-ϕ15 | 506 | 114.5 | 4-ϕ23 | 40 |
| 50 | 170 | 431 | 513 | 125 | 4-ϕ18 | 507 | 120.5 | 4-ϕ19 | 513 | 127 | 8-ϕ19 | 50 |
| 65 | 170 | 440 | 532 | 145 | 4-ϕ18 | 529 | 139.5 | 4-ϕ19 | 535 | 149 | 8-ϕ23 | 65 |
| 80 | 200 | 448 | 548 | 160 | 8-ϕ18 | 543 | 152.5 | 4-ϕ19 | 553 | 168 | 8-ϕ23 | 80 |
| 100 | 220 | 459 | 569 | 180 | 8-ϕ18 | 573 | 190.5 | 8-ϕ19 | 586 | 200 | 8-ϕ23 | 100 |
| 125 | 220 | 471 | 596 | 210 | 8-ϕ18 | 598 | 216 | 8-ϕ23 | 610 | 235 | 8-ϕ23 | 125 |
| 150 | 270 | 484 | 626 | 240 | 8-ϕ22 | 623 | 241.5 | 8-ϕ23 | 643 | 270 | 12-ϕ23 | 150 |
| 200 | 310 | 504 | 674 | 295 | 12-ϕ22 | 675 | 298.5 | 8-ϕ23 | 694 | 330 | 12-ϕ25 | 200 |
| 250 | 370 | 535 | 737 | 355 | 12-ϕ26 | 738 | 362 | 12-ϕ25 | 757 | 387.5 | 16-ϕ30 | 250 |
| 300 | 400 | 560 | 790 | 410 | 12-ϕ26 | 801 | 432 | 12-ϕ25 | 820 | 451 | 16-ϕ33 | 300 |

## Flange Type Vortex Flow Meter Dimensions

Table 2: Superheated Steam Density & Relative Temperature and Pressure (Kg/m³)

| Absolute Pressure (MPa) | Temperature (℃) | | | | | |
|---|---|---|---|---|---|---|
| | 150 | 200 | 250 | 300 | 350 | 400 |
| 0.1 | 0.52 | 0.4 | 0.42 | 0.38 | | |
| 0.15 | 0.78 | 0.7 | 0.62 | 0.57 | 0.52 | 0.49 |
| 0.2 | 1.04 | 0.9 | 0.83 | 0.76 | 0.69 | 0.65 |
| 0.25 | 1.31 | 1.1 | 1.04 | 0.95 | 0.87 | 0.81 |
| 0.33 | 1.58 | 1.3 | 1.25 | 1.14 | 1.05 | 0.97 |
| 0.35 | 1.85 | 1.6 | 1.46 | 1.33 | 1.22 | 1.13 |
| 0.4 | 2.12 | 1.8 | 1.68 | 1.52 | 1.40 | 1.29 |
| 0.5 | - | 2.3 | 2.11 | 1.91 | 1.75 | 1.62 |
| 0.6 | - | 2.8 | 2.54 | 2.30 | 2.11 | 1.95 |
| 0.7 | - | 3.3 | 2.97 | 2.69 | 2.46 | 2.27 |
| 0.8 | - | 3.8 | 3.41 | 3.08 | 2.82 | 2.60 |
| 1.0 | - | 4.8 | 4.30 | 3.88 | 3.54 | 3.26 |
| 1.2 | - | 5.9 | 5.20 | 4.67 | 4.26 | 3.92 |
| 1.5 | - | 7.5 | 6.58 | 5.89 | 5.36 | 4.93 |
| 2.0 | - | - | 8.96 | 7.97 | 7.21 | 6.62 |
| 2.5 | - | - | 11.5 | 10.1 | 9.11 | 8.33 |
| 3.0 | - | - | 14.2 | 12.3 | 11.1 | 10.1 |
| 3.5 | - | - | 17.0 | 14.6 | 13.0 | 11.8 |
| 4.0 | - | - | - | 17.0 | 15.1 | 13.6 |

Table 3: Flow Range

| Caliber (mm) | Liquid ($m^3/h$) | Gas ($m^3/h$) |
|---|---|---|
| 15 | 0.8~6 | 6~40 |
| 20 | 1~8 | 8~50 |
| 25 | 1.3~15 | 8~100 |
| 32 | 1.5~16 | 14~350 |
| 40 | 3~33 | 18~450 |
| 50 | 4~44 | 30~750 |
| 65 | 6~66 | 50~1250 |
| 80 | 13~140 | 70~1750 |
| 100 | 20~220 | 100~2500 |
| 125 | 36~400 | 200~5000 |
| 150 | 50~600 | 400~10000 |
| 200 | 100~1200 | 600~15000 |
| 250 | 150~1800 | 1000~25000 |
| 300 | 200~2400 | - |
| 400 | 300~3600 | - |
| 500 | 400~4800 | - |
| 600 | 500~6000 | - |

## The Choice for Measured Medium

**The choice for gas flow range**

The upper limit of vortex flowmeter does not influenced by the temperature and pressure of medium. Flow range is depended on the medium's density and viscosity at working condition.Thus, the confirmation of flow range is calculation the available lower limit flow.

Calculation 1:First of all, using $Q_P$ formula to calculate the working condition lower limit flow,which is determined by viscosity

In the formula $Q_P=Q_{0X}$

$Q_P$: Medium's lower limit flow at working condition density

Qo: Lower limit flow of flowmeter at reference condition

$P_o$: Reference the air density, $P_o$=1.205kg/m³

P : Working condition density of medium to be measured

Calculation 2 Qv formula for calculation the lower flow limit by kinematic viscosity

In the formula: $Q_V=Q_O \times V/V_O$ ($m^3/h$)

Qv : Lower limit flow of the medium

Qo: Low flow limit at reference condition

Vo: Reference viscosity,15kgm/S²

V: The working condition viscosity of medium(kgm/S²)

Compare Qo and Qv, the larger flow as the real low flow limit of gas.

**The choice for liquid flow range**

As shown on flow range table 3

**The choice of steam flow range**

Saturated steam: Reference to table 1 to choose

Superheated steam: Through table 2 to get the pressure, temperature and corresponding density,taking the similar density's flow range from table six to confirm the flow range of superheated steam.

# VORTEX FLOW METER

AUTOMAC ENGINEERS
Excellency in Technology Solution

## DN15-DN300 mm

### Selection Table Vortex Flow Meter

| | | | | | | | | | | |
|---|---|---|---|---|---|---|---|---|---|---|
| Model | AUTOMAC | | | | | | | | | |
| Caliber | DN15-DN300 | | | | | | | | | |
| Structure | Integrated | I | | | | | | | | |
| | Seperated | S | | | | | | | | |
| Nominal | 1.6 MPa | | P1 | | | | | | | |
| | 2.5 MPa | | P2 | | | | | | | |
| | 4.0 MPa | | P3 | | | | | | | |
| Connection | Flange | | | C1 | | | | | | |
| | Wafer | | | C2 | | | | | | |
| | Tri-clamp | | | C3 | | | | | | |
| | Thread | | | C4 | | | | | | |
| Medium | Liquid | | | | M1 | | | | | |
| | Common Gas | | | | M2 | | | | | |
| | Saturated Steam | | | | M3 | | | | | |
| | Superheated Steam | | | | M4 | | | | | |
| Shell Material | Stainless steel 304 | | | | | K2 | | | | |
| | Stainless steel 316 | | | | | K3 | | | | |
| Flange Standard | ANSI 150#, 300#, 600# | | | | | | F1 | | | |
| | JIS 10K, 20K, 40K | | | | | | F2 | | | |
| | DIN PN10,PN16,PN25,PN40 | | | | | | F3 | | | |
| Power Supply | 24V | | | | | | | D1 | | |
| | 3.6V Lithium | | | | | | | D2 | | |
| Signal Output | 4~20 mA,HART | | | | | | | | G1 | |
| | Pulse,RS485 | | | | | | | | G2 | |
| Special Mark | Standard signal output | | | | | | | | | B1 |
| | Intrinsically safe ex-proof | | | | | | | | | B2 |
| | On site display | | | | | | | | | B3 |
| | Temperature compensation | | | | | | | | | B4 |
| | Pressure compensation | | | | | | | | | B5 |
| | Temperature and pressure compensation | | | | | | | | | B6 |
| | High Temperature 350℃ | | | | | | | | | B7 |

Sensor

Swirler

Available Flow Totalizer

### Installation Straight Length Requirement

| Upstream Straight pipe form | The Straight length of upstream | The Straight length of downstream |
|---|---|---|
| Concentric tube fully open valve | ⩾ 12 DN | ⩾ 5 DN |
| Concentric contraction fully open valve | ⩾ 15 DN | |
| Single quarter bend | ⩾ 20 DN | |
| Two quarter bends on the same surface | ⩾ 25 DN | |
| Two quarter bends on the different surface | ⩾ 40 DN | |
| Regulating valve、Half-open gate valve | ⩾ 50 DN | |